Technical documentation
Last changed on: 03.06.2019

BPS series

Small High Voltage Print Module for PCB mounting up to 4 Watt

- Versions from 300 V – 6 kV, 1/3/4 W available
- patented resonance converter technology
- controlled by analog set voltage
- analog monitor voltage
- wide supply range
- low ripple and noise, low EMI
- RoHS compliant

Document history

Version	Date	Major changes
2.2	03.06.2019	Corrections of documentation
2.1	04.09.2018 25.09.2018	Extended operation temperature Fixed typo
2.0	28.02.2017 13.06.2018 01.11.2018	Relayouted documentation Corrections of documentation Fixed typo BPx60 674 12

Disclaimer / Copyright

1 General description

The BPS High Voltage Power Supply module is a small DC/DC converter which can be mounted and soldered on printed circuit boards (PCB). The output voltage is controllable with an analog control voltage. Therefore a potentiometer or fixed resistor can be used. The patented resonance converter technology and moulded metal box shielding guarantee lowest electromagnetic interference and low ripple and noise of the output voltage.

Customized versions can be produced on request.

2 Technical Data

SPECIFICATIONS	BPS 1 W	BPS 3W	BPS 4W
Polarity	Factory fixed, positive or negative		
Ripple and noise (f > 10 Hz) [1]	typ. < 10 mV max. 25 mV_{p-p}	typ.< 20 mV_{p-p} max. 60 mV_{p-p}	typ. < 5 mV_{p-p} max. 10 mV_{p-p}
Stability [ΔV_{out} vs. ΔV_{in}] [1]	$< 5 \cdot 10^{-4} \cdot V_{nom}$		$< 2 \cdot 10^{-4} \cdot V_{nom}$
Stability - [ΔV_{out} vs. Δr_{load}] [1]	$< 2 \cdot 10^{-3} \cdot V_{nom}$		$< 5 \cdot 10^{-4} \cdot V_{nom}$
Temperature coefficient	50 ppm/K [2]		
Supply voltage V_{in}	4.5 – 5.5 V	11.5 – 15.5 V	11.4 – 12.6 V
Supply current I_{in} at $V_{out} = 0$ at $V_{out} = V_{nom}$ / no load at $V_{out} = V_{nom}$ / with load	< 10 mA < 50 mA < 400 mA	< 10 mA < 50 mA < 500 mA	< 10 mA < 40 mA < 500 mA
Set / Monitor voltage	0 - 2.5 V	0 - 5 V	
Adjustment accuracy	± 1 % [2]		
Signal - ON	TTL-Pegel LOW ➜ HV = 0, HIGH or open ➜ HV according to V_{set}		
Signal - /ON			TTL-Pegel HIGH ➜ HV = 0, LOW or open ➜ HV according to V_{set}
Reference voltage V_{REF} (internal)	2.5 V / 0.5 mA	5 V / 0.5 mA	
Control V_{set} - version 1	Remote control with an ext. potentiometer (10 – 100kΩ) between REF and GND, sliding contact on V_{set}		
Control V_{set} - version 2	with V_{set} $0 \leq V_{set} \leq V_{ref}$ ➜ $0 \leq V_{out} \leq \lvert V_{nom} \rvert \pm 1$ % [2]		
	Attention! Output voltage is internally **not limited!** Do not use V_{set} > 2.5V (1W) or 5V (3W)! Output current is internally limited to opprox. 1.5• I_{nom}		**Attention!** Output voltage and output current are internally **limited** to 1.1•V_{nom} resp. I_{nom}
Protection	Overload and short circuit protected		
HV connector	Pin		
Case	Metal box, moulded		
Dimensions – L/W/H	40 / 40 / 18mm³		50 (55) / 40 / 17mm³
Operating temperature	-20 – 60 °C		
Storage temperature	-20 – 60 °C		

[1] Specifications for stability, ripple and noise are guaranteed in the range 2% • $V_{nom} < V_{out} \leq V_{nom}$

[2] Temperature coefficient and accuracy are guaranteed in the temperature range 0 – 40 °C; for -20 – 60°C max. 150 ppm/K and ± 1.5 % resp.

Table 1: Technical data: Specifications

CONFIGURATIONS						
Type	**V_{nom}**	**I_{nom}**	**Ripple / Noise typ. (mV_{p-p})**	**Ripple / Noise max. (mV_{p-p})**	**Length (mm)**	**Item code**
BPS 1 W						
BPx 05 205 5	500 V	2 mA	< 10	< 20	40	BP005205x05
BPx 10 105 5	1 kV	1 mA	< 10	< 20	40	BP010105x05
BPx 15 604 5	1.5 kV	0.6 mA	< 10	< 20	40	BP015604x05
BPx 20 504 5	2 kV	0.5 mA	< 10	< 20	40	BP020504x05
BPx 25 404 5	2.5 kV	0.4 mA	< 15	< 25	40	BP025404x05
BPx 30 304 5	3 kV	0.3 mA	< 15	< 25	40	BP030304x05
BPS 3 W						
BPx 03 106 12	300 V	10 mA	< 15	< 30	40	BP003106x12
BPx 05 605 12	500 V	6 mA	< 15	< 30	40	BP005605x12
BPx 10 305 12	1 kV	3 mA	< 20	< 40	40	BP010305x12
BPx 15 205 12	1.5 kV	2 mA	< 25	< 50	40	BP015205x12
BPx 20 155 12	2 kV	1.5 mA	< 30	< 55	40	BP020155x12
BPx 25 125 12	2.5 kV	1.2 mA	< 35	< 60	40	BP025125x12
BPx 30 105 12	3 kV	1 mA	< 35	< 60	40	BP030105x12
BPS 4 W						
BPx 05 805 12	500 V	8 mA	< 5	< 10	50	BP005805x12
BPx 10 405 12	1 kV	4 mA	< 5	< 10	50	BP010405x12
BPx 20 205 12	2 kV	2 mA	< 5	< 10	50	BP020205x12
BPx 30 135 12	3 kV	1.3 mA	< 5	< 10	50	BP030135x12
BPx 40 105 12	4 kV	1 mA	< 5	< 10	50	BP040105x12
BPx 60 074 12	6 kV	0.67 mA	< 5	< 10	55	BP060074x12

Table 2: Technical data: Configurations

CONFIGURATION ORDER GUIDE (item code parts)				
BP	**005**	**805**	**P**	**12**
Type BPS	V_{nom}	I_{nom} (nA)	Polarity	Input Voltage
	three significante digits *100V For Examle: 005 = 500V	two significante digits + number of zeros For Examle: 805 = 8mA	p = positive n = negative	two significante digits 05 = 5 Volt 12 = 12 Volt

Table 3: Technical data: Options and order information

3 Dimensional drawing

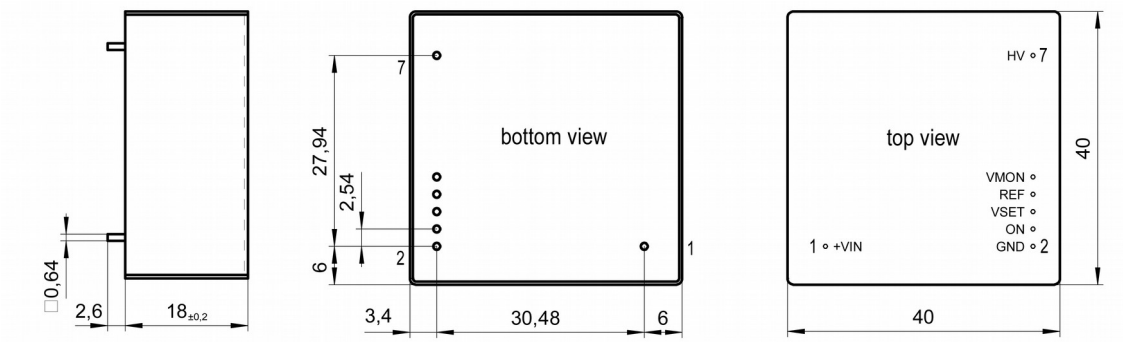

Figure 1: dimensional drawing BPS 1/3W

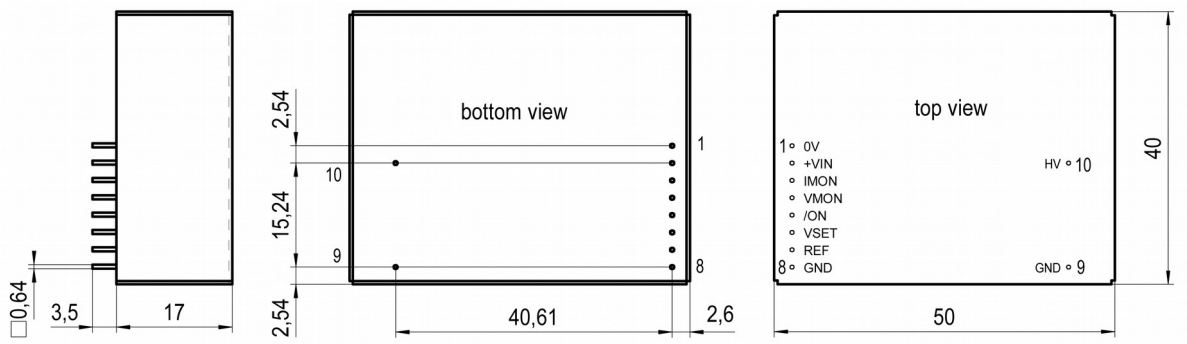

Figure 2: dimensional drawing BPS 4W

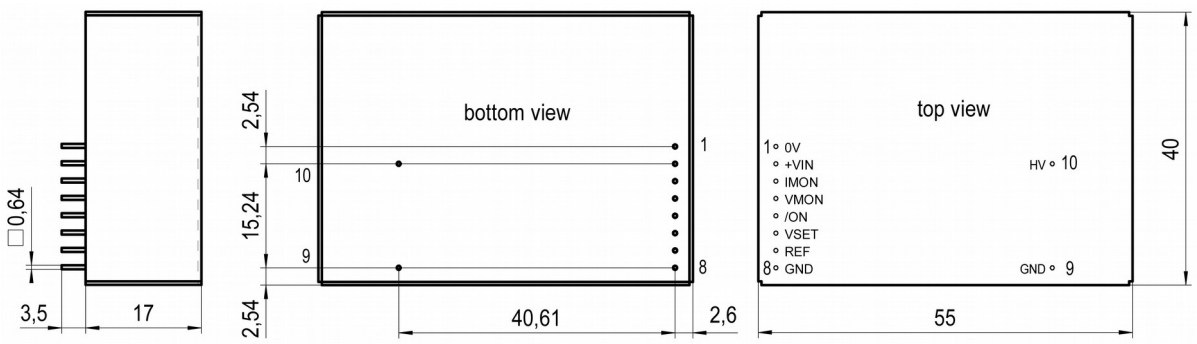

Figure 3 top: dimensional drawing BPS 4W/6kV

4 PIN assignment

4.1 BPS 1/3W

PIN	NAME	DESCRIPTION	VALUE
1	**VIN**	V_{in} supply voltage	+5 V / +12 V DC
2	**GND**	Ground	
3	**ON**	Signal ON	TTL-level, LOW ➜ HV OFF HIGH or n.c. ➜ HV ON
4	**VSET**	V_{set} Set value of output voltage	0..2.5 V | 0..5 V
5	**REF**	V_{ref} Internal reference voltage	2.5 V | 5V
6	**VMON**	V_{mon} Monitor voltage	0..2.5 V | 0..5 V
7	**HV**	V_{out} High voltage output	
Note: Case is connected to GND			

Table 4: PIN Assignment BPS 1/3W

4.2 BPS 4W

PIN	NAME	DESCRIPTION	VALUE
1	**0V** (*	Supply ground	
2	**+VIN**	V_{in} Supply voltage	+12 V DC
3	**IMON**	I_{mon} Monitor voltage of output current	0..5 V
4	**VMON**	V_{mon} Monitor voltage	0..5 V
5	**/ON**	Signal ON	TTL-level, LOW or n.c. ➜ HV ON HIGH ➜ HV OFF
6	**VSET**	V_{set} Set value of output voltage	0..5 V
7	**REF**	V_{ref} Internal reference voltage	5 V
8	**GND** (*	Signal ground	
9	**GND** (*	HV ground	
10	**HV**	V_{out} High voltage output	
Note: Case is connected to GND *) internally connected			

Table 5: PIN Assignment BPS 4W

5 Control principle

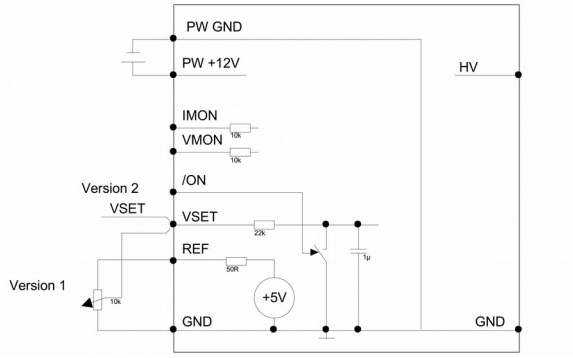

Figure 4: Control principle BPS 1/3W

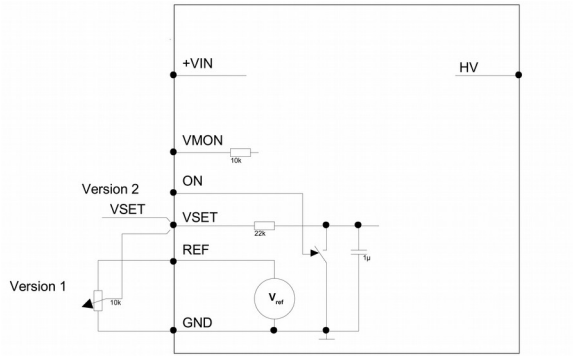

Figure 5: Control principle BPS 4W

6 Warranty & Service

This device is made with high care and quality assurance methods. The factory warranty is up to 12 months, starting from date of issue (invoice). Within this period a 5 years warranty extension can be ordered at additional charge. Please contact iseg sales department.

CAUTION!
Repair and maintenance may only be performed by trained and authorized personnel. For repair please follow the RMA instructions on our website: www.iseg-hv.com/en/support/rma

7 Manufacturer´s contact

iseg Spezialelektronik GmbH
Bautzner Landstr. 23
01454 Radeberg / OT Rossendorf
GERMANY
FON: +49 351 26996-0 | FAX: +49 351 26996-21
www.iseg-hv.com | info@iseg-hv.de | sales@iseg-hv.de